PROPOSED INDUSTRIAL DEVELOPMENT
14 PARRAMATTA ROAD, LIDCOMBE
CIVIL ENGINEERING WORKS

GENERAL NOTES:

1. ALL WORK TO BE CARRIED OUT IN ACCORDANCE WITH AUBURN COUNCIL SPECIFICATION. CONTRACTOR TO OBTAIN AND RETAIN A COPY ON SITE DURING THE COURSE OF THE WORKS.
2. ALL NEW WORKS ARE TO MAKE A SMOOTH JUNCTION WITH EXISTING CONDITIONS, AND MARRY IN A 'WORKMANLIKE' MANNER.
3. THE CONTRACTOR IS TO VERIFY THE LOCATION OF ALL SERVICES WITH EACH RELEVANT AUTHORITY. ANY DAMAGE TO SERVICES SHALL BE RECTIFIED BY THE CONTRACTOR OR THE RELEVANT AUTHORITY AT THE CONTRACTOR'S EXPENSE. SERVICES SHOWN ON THESE PLANS ARE ONLY THOSE EVIDENT AT THE TIME OF SURVEY OR AS DETERMINED FROM SERVICE DIAGRAMS. HENRY AND HYMAS CONSULTING PTY. LTD. CANNOT GUARANTEE THE INFORMATION SHOWN NOR ACCEPT ANY RESPONSIBILITY FOR INACCURACIES OR INCOMPLETE DATA.
4. SERVICES & ACCESSES TO THE EXISTING PROPERTIES ARE TO BE MAINTAINED IN WORKING ORDER AT ALL TIMES DURING CONSTRUCTION.
5. ADJUST EXISTING SERVICE COVERS TO SUIT NEW FINISHED LEVELS TO RELEVANT AUTHORITY REQUIREMENTS WHERE NECESSARY.
6. REINSTATE AND STABILISE ALL DISTURBED LANDSCAPED AREAS.
7. MINIMUM GRADE OF SUBSOIL SHALL BE 0.5% (1:200) FALL TO OUTLETS.
8. ALL TEMPORARY SEDIMENT AND EROSION CONTROL DEVICES ARE TO BE CONSTRUCTED, PLACED AND MAINTAINED IN ACCORDANCE WITH THE TECHNICAL SPECIFICATIONS, EROSION AND SEDIMENTATION CONTROL PLAN AND AUBURN COUNCIL REQUIREMENTS WHERE APPLICABLE.
9. CONTRACTOR TO CHECK AND CONFIRM SITE DRAINAGE CONNECTIONS ACROSS THE VERGE PRIOR TO COMMENCEMENT OF SITE DRAINAGE WORKS.
10. PROPERTIES AFFECTED BY THE WORKS ARE TO BE NOTIFIED IN ADVANCE WHERE DISRUPTION TO EXISTING ACCESS IS LIKELY.

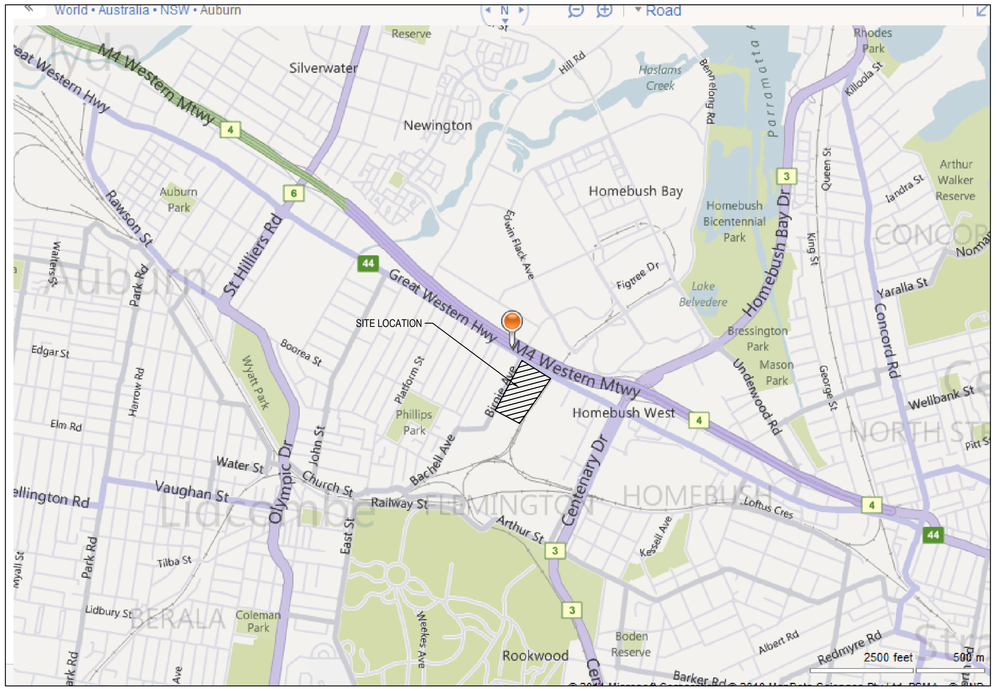

LOCALITY SKETCH
N.T.S

DRAWING SCHEDULE	
11064_DA_C000	COVER SHEET, DRAWING SCHEDULE, NOTES & LOCALITY SKETCH
11064_DA_C100	GENERAL ARRANGEMENT PLAN SHEET 1 OF 2
11064_DA_C101	GENERAL ARRANGEMENT PLAN SHEET 2 OF 2
11064_DA_C200	STORMWATER MISCELLANEOUS DETAILS & PIT LID SCHEDULE
11064_DA_C201	OSD TANK SECTIONS DETAILS
11064_DA_C250	STORMWATER CATCHMENT PLAN
11064_DA_SE01	SEDIMENT & EROSION CONTROL PLAN
11064_DA_SE02	SEDIMENT & EROSION CONTROL TYPICAL SECTIONS & DETAILS SHEET

FOR DA ONLY

SURVEY INFORMATION
SURVEYED BY WHELANDS INSITES PTY LTD
DATUM: AHD SSM26659
ORIGIN OF LEVELS: RL 14.942m

REVISION	AMENDMENT	DRAWN	DESIGNED	DATE	REVISION	AMENDMENT	DRAWN	DESIGNED	DATE
03	RE-ISSUED FOR DA ONLY	M.Stimova	T.Dempsey	08/03/2011					
02	ISSUED FOR DA ONLY	A.Levar	T.Dempsey	02/03/2011					
01	ISSUED FOR INFORMATION ONLY	A.Levar	T.Dempsey	25/02/2011					

Client
GOLDEN THINKING

Architect
VT ARCHITECTS PTY LTD.

This drawing and design remains the property of Henry & Hymas and may not be copied in whole or in part without the prior written approval of Henry & Hymas.

Level 5,
79 Victoria Avenue
Chatswood NSW 2067

Telephone +61 2 9417 8400
Facsimile +61 2 9417 8337
Email email@hhconsult.com.au
Web www.henryandhymas.com.au

henry&hymas

Project
14, PARRAMATA ROAD, LIDCOMBE.
PROPOSED INDUSTRIAL DEVELOPMENT

Title
COVER SHEET, DRAWING SCHEDULE, NOTES & LOCALITY SKETCH

Drawn	Designed	Date
A.Levar	T.Dempsey	FEB 2011
Checked	Approved	Scale
A.Francis	A.Francis	N.T.S.

Drawing number 11064_DA_C000
Revision 03

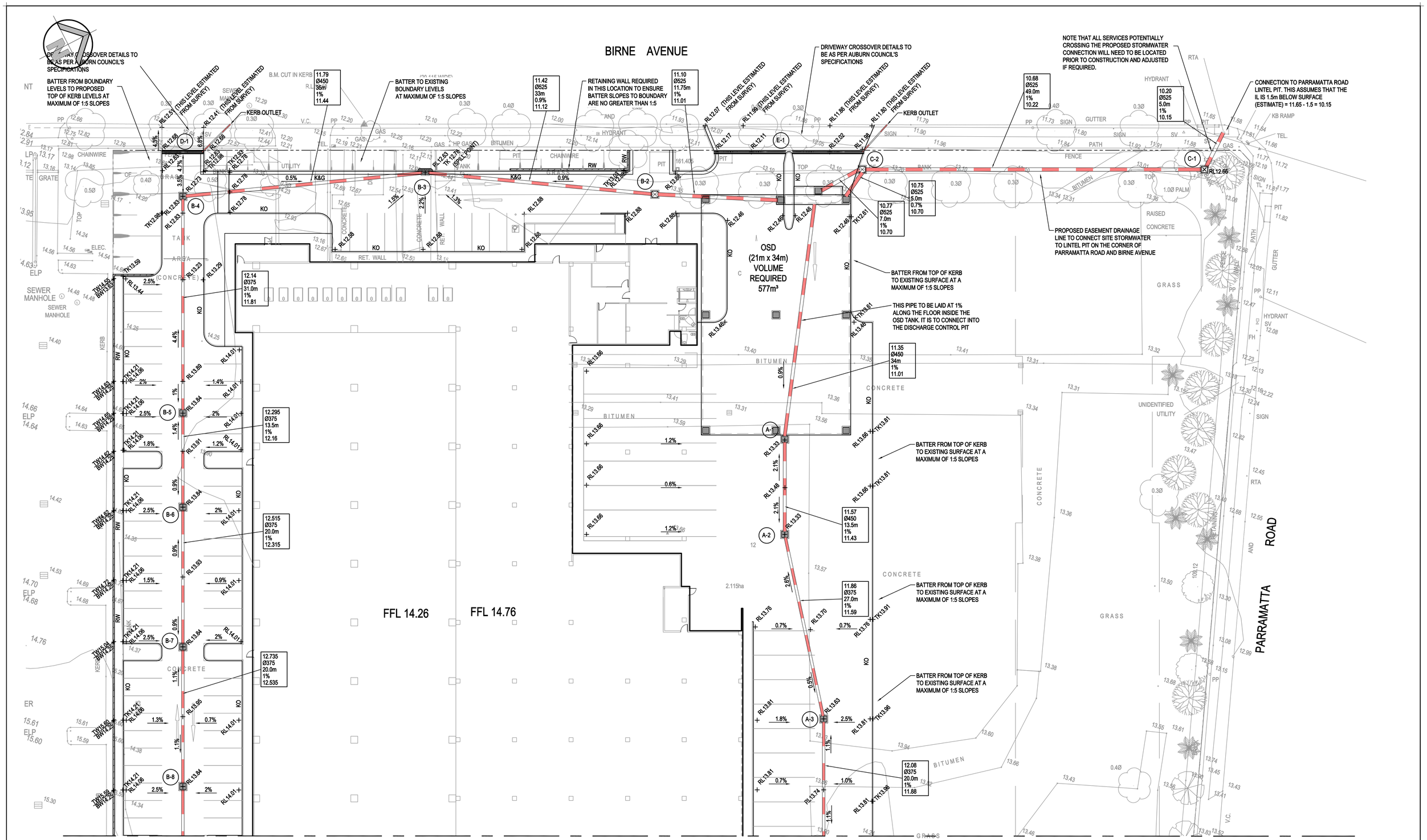

GENERAL ARRANGEMENT

SCALE 1:250

NOTE:
APPROPRIATE WATER QUALITY DEVICES WILL BE NOMINATED FOR CONSTRUCTION CERTIFICATE STAGE. THESE WILL BE BASED ON THE REQUIREMENTS STIPULATED FROM THE DA CONDITIONS OF CONSENT.

0 5 10 15 20 25m
5 4 3 2 1
SCALE 1:250

FOR DA ONLY

REVISION	AMENDMENT	DRAWN	DESIGNED	DATE
03	RE-ISSUED FOR DA ONLY	M.Stimova	T.Dempsey	08/03/2011
02	ISSUED FOR DA ONLY	A.Levar	T.Dempsey	02/03/2011
01	ISSUED FOR INFORMATION ONLY	A.Levar	T.Dempsey	25/02/2011

Client: GOLDEN THINKING

Architect: VT ARCHITECTS PTY LTD.

This drawing and design remains the property of Henry & Hymas and may not be copied in whole or in part without the prior written approval of Henry & Hymas.

Level 5,
79 Victoria Avenue
Chatswood NSW 2067

Telephone +61 2 9417 8400
Facsimile +61 2 9417 8337
Email email@hhconsult.com.au
Web www.henryandhymas.com.au

henry&hymas

Project: 14, PARRAMATA ROAD, LIDCOMBE. PROPOSED INDUSTRIAL DEVELOPMENT

Title: GENERAL ARRANGEMENT PLAN SHEET 1 OF 2

Drawn	Designed	Date
A.Levar	T.Dempsey	FEB 2011
Checked	**Approved**	**Scale**
A.Francis	A.Francis	1:250@A1

Drawing number: 11064_DA_C100

Revision: 03

FOR CONTINUATION REFER TO DRAWING 11064_DA_C100

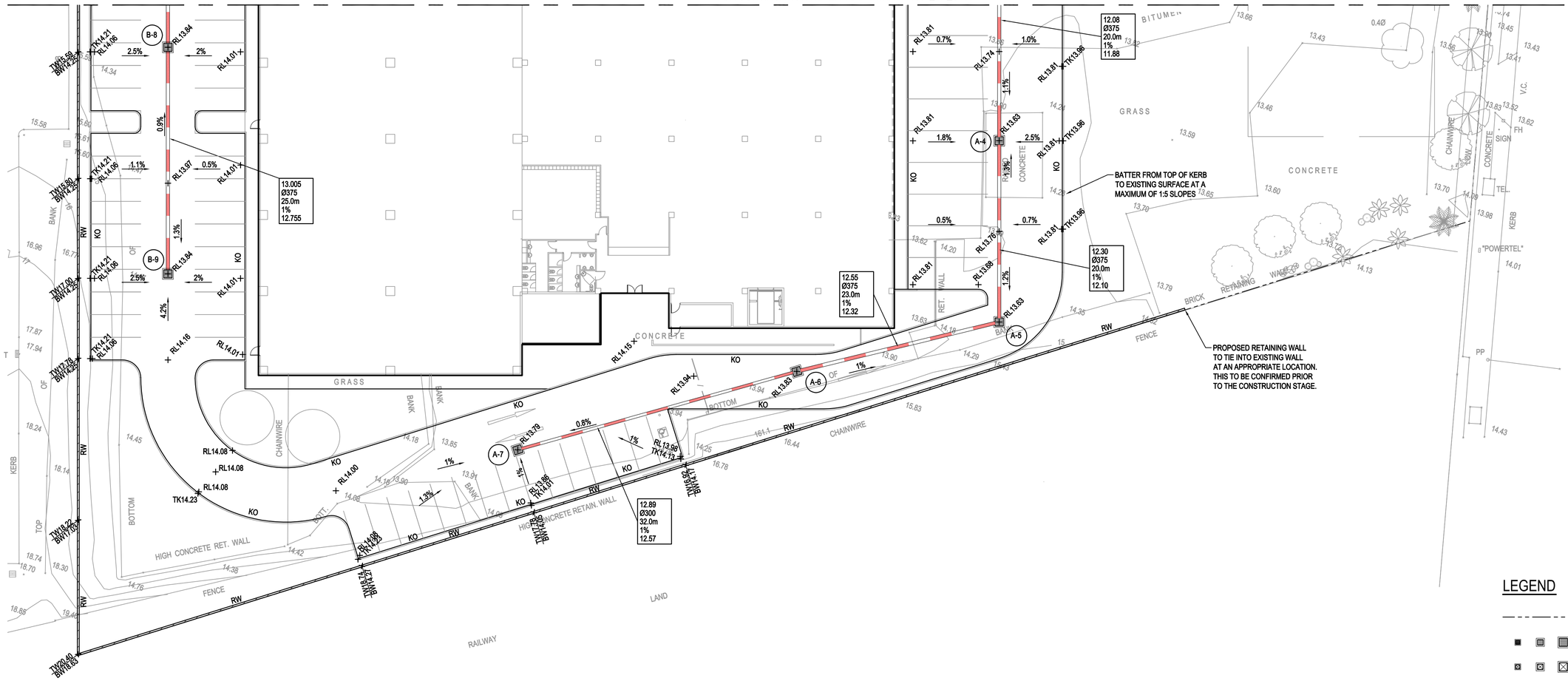

GENERAL ARRANGEMENT

SCALE 1:250

LEGEND

- EXISTING BOUNDARY
- PROPOSED SURFACE INLET PITS
- PROPOSED JUNCTION PITS
- PROPOSED LINTEL ONGRADE & SAG PITS
- A-1 — LINE LETTER, PIT NUMBER — PROPOSED PIT TAG
- PROPOSED STORMWATER PIPE
- RL13.00 — PROPOSED SPOT LEVEL
- TK13.15 — PROPOSED TOP OF KERB LEVEL
- 11.86 / Ø375 / 27.0m / 1% / 11.59 — STORMWATER UPSTREAM INVERT RL. / STORMWATER PIPE DIAMETER & CLASS / STORMWATER PIPE LENGTH / STORMWATER PIPE GRADE / STORMWATER DOWNSTREAM INVERT RL.
- PROPOSED GRATED DRAIN
- K&G — PROPOSED KERB & GUTTER
- KO — PROPOSED KERB ONLY
- RW — PROPOSED RETAINING WALL
- TW14.50 — TOP LEVEL OF PROPOSED RETAINING WALL
- BW13.50 — BOTTOM LEVEL OF PROPOSED RETAINING WALL
- PROPOSED BATTER LINE

0 5 10 15 20 25m

5 4 3 2 1

SCALE 1:250

FOR DA ONLY

REVISION	AMENDMENT	DRAWN	DESIGNED	DATE
03	RE-ISSUED FOR DA ONLY	M.Stimova	T.Dempsey	08/03/2011
02	ISSUED FOR DA ONLY	A.Levar	T.Dempsey	02/03/2011
01	ISSUED FOR INFORMATION ONLY	A.Levar	T.Dempsey	25/02/2011

Client: GOLDEN THINKING

Architect: VT ARCHITECTS PTY LTD.

This drawing and design remains the property of Henry & Hymas and may not be copied in whole or in part without the prior written approval of Henry & Hymas.

Level 5,
79 Victoria Avenue
Chatswood NSW 2067

Telephone +61 2 9417 8400
Facsimile +61 2 9417 8337
Email email@hhconsult.com.au
Web www.henryandhymas.com.au

henry&hymas

Project: 14, PARRAMATA ROAD, LIDCOMBE. PROPOSED INDUSTRIAL DEVELOPMENT

Title: GENERAL ARRANGEMENT PLAN SHEET 2 OF 2

Drawn	Designed	Date
A.Levar	T.Dempsey	FEB 2011
Checked	Approved	Scale
A.Francis	A.Francis	1:250@A1

Drawing number: 11064_DA_C101

Revision: 03

TYPICAL PIT CHAMBER SIZES

IT IS THE CONTRACTORS RESPONSIBILITY TO SELECT PIT CHAMBER SIZE WITH REGARDS TO PIPE SIZE, DEPTH TO INVERT AND SKEW ANGLE. REFER SKETCHES BELOW.

1. SELECT PIT CHAMBER USING THE STEPS BELOW:
2. SELECT PIT CHAMBER SIZE DEPENDING ON THE PIPE DIAMETERS.
3. CHECK PIT CHAMBER SIZE TO SATISFY DEPTH TO INVERT REQUIREMENTS.
   CHECK PIT CHAMBER DIMENSIONS TO SATISFY THE SKEW ANGLE IN THE TABLE.

FOR B = 600mm - MAX. SIDE ENTRY PIPE AT 45° SKEW = 225mm
FOR B = 900mm - MAX. SIDE ENTRY PIPE AT 45° SKEW = 375mm
FOR B = 1200mm - MAX. SIDE ENTRY PIPE AT 45° SKEW = 600mm
FOR B = 1500mm - MAX. SIDE ENTRY PIPE AT 45° SKEW = 825mm
FOR B = 1900mm - MAX. SIDE ENTRY PIPE AT 45° SKEW = 1050mm

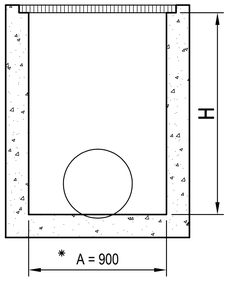

SECTION
NTS

*A = 600 FOR PIPES UP TO 375 DIA.

(1) PIT CHAMBER DIMENSIONS FOR PIPES UP TO 600 DIA.

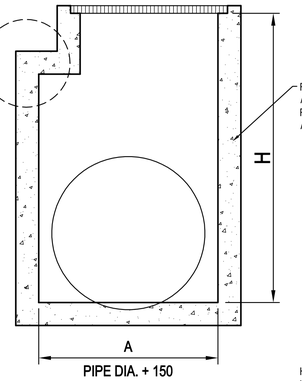

SECTION
NTS

(1) PIT CHAMBER FOR PIPES GREATER THAN 600 DIA.

(2) PIT SIZE & DEPTH REQUIREMENTS

H = 0-900mm - AxB = 600x600mm
H = 900-1200mm - AxB = 900x600mm
H = >1200mm - AxB = 900x900mm

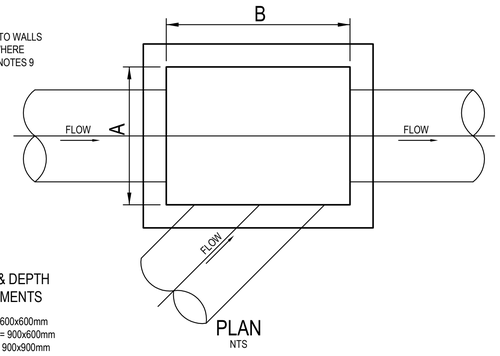

PLAN
NTS

(3) PIT CHAMBER FOR SIDE ENTRY ON SKEW

STORMWATER DRAINAGE NOTES:

1. STORMWATER DESIGN CRITERIA: THE STORMWATER DESIGN SHOWN ON THESE DRAWINGS HAS BEEN CARRIED OUT IN ACCORDANCE WITH AUBURN COUNCIL'S REQUIREMENTS AND AUSTRALIAN RAINFALL AND RUNOFF (AR&R) GUIDELINES.
2. PIPES 300 DIA. AND LARGER TO BE REINFORCED CONCRETE CLASS '2' APPROVED SPIGOT AND SOCKET WITH RUBBER RING JOINTS U.N.O.
3. PIPES UP TO 300 DIA. SHALL BE SEWER GRADE UPVC WITH SOLVENT WELDED JOINTS.
4. EQUIVALENT STRENGTH VCP OR FRC PIPES MAY BE USED.
5. PIPES SHALL BE LAID ON A 75MM THICK SAND BED. IN ALL CASES BACKFILL TRENCH WITH SAND TO 200MM ABOVE THE PIPE. WHERE PIPE IS UNDER PAVEMENTS BACKFILL REMAINDER OF TRENCH TO UNDERSIDE OF PAVEMENT WITH SAND OR APPROVED GRANULAR MATERIAL COMPACTED IN 150 MM LAYERS TO 98% STANDARD MAXIMUM DRY DENSITY IN ACCORDANCE WITH AS 1289 5.2.1 (OR A DENSITY INDEX OF NOT LESS THAN 75).
6. APPROVED PRECAST CONCRETE PITS INSIDE PROPERTY BOUNDARIES MAY BE USED IN LIEU OF CAST INSITU PITS WHERE SUITABLE.
7. WHERE TRENCHES ARE IN ROCK THE PIPE SHALL BE BEDDED ON A MINIMUM OF 50 MM CONCRETE BED (OR 75 MM BED OF 12 MM BLUE METAL) UNDER THE BARREL OF THE PIPE.
8. ENLARGERS, CONNECTORS AND JUNCTIONS TO BE PREFABRICATED FITTINGS WHERE PIPES ARE LESS THAN 300 DIA.
9. WHERE SUBSOIL DRAINS PASS UNDER THE FLOOR SLABS AND VEHICULAR PAVEMENTS, UNSLOTTED UPVC SEWER GRADE PIPE IS TO BE USED.
10. CARE IS TO BE TAKEN WITH LEVELS OF STORMWATER LINES. GRADES SHOWN ARE NOT TO BE REDUCED WITHOUT APPROVAL.
11. GRATES AND COVERS SHALL CONFORM TO AS3996 - 1992 AT ALL TIMES DURING CONSTRUCTION OF THE STORMWATER PITS.
12. ADEQUATE SAFETY PROCEDURES SHALL BE IMPLEMENTED TO PREVENT PERSONNEL FALLING INTO OPEN PITS.
13. EXISTING STORMWATER PIPE LOCATIONS AND INVERT LEVELS TO BE CONFIRMED PRIOR TO COMMENCEMENT OF CONSTRUCTION.
14. ALL EXISTING STORMWATER DRAINAGE LINES AND PITS THAT ARE TO REMAIN ARE TO BE INSPECTED AND CLEANED. DURING THIS PROCESS ANY PART OF THE STORMWATER DRAINAGE SYSTEM THAT WARRANTS REPAIR SHALL BE REPORTED TO THE SUPERINTENDENT FOR FURTHER DIRECTIONS.
15. AREAS AND ROAD PAVEMENTS.

PIT LID SCHEDULE

PIT/STRUCTURE NUMBER	DESCRIPTION
(A-1) (A-2) (A-3) (A-4) (A-5) (A-6) (A-7) (B-4) (B-5) (B-6) (B-7) (B-8) (B-9)	INLET PIT WITH 900x900 HINGED HEAVY DUTY GRATED ACCESS LID CLASS "D" IN ACCORDANCE WITH LOCAL COUNCIL REQUIREMENTS.
(B-2) (C-1) (C-2)	JUNCTION PIT WITH 900x900 HINGED HEAVY DUTY CONCRETE LID CLASS "D" IN ACCORDANCE WITH LOCAL COUNCIL REQUIREMENTS.
(E-1) (D-1)	300mm WIDE CONCRETE TRENCH DRAIN WITH HEAVY DUTY CLASS "D" LID IN ACCORDANCE WITH LOCAL COUNCIL REQUIREMENTS.
(B-3)	SAG KERB INLET PIT WITH 1.8m LINTEL AND HEAVY DUTY GRATED LID CLASS "D" IN ACCORDANCE WITH LOCAL COUNCIL REQUIREMENTS.

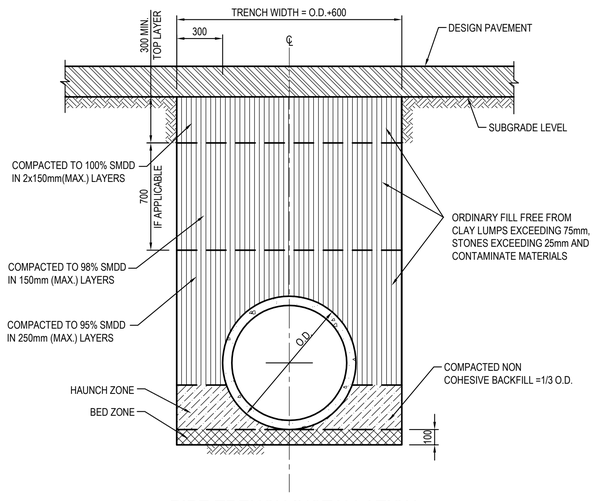

PIPE TRENCH INSTALLATION BENEATH PAVEMENT

(H1 & H2 SUPPORT)
SCALE 1:20

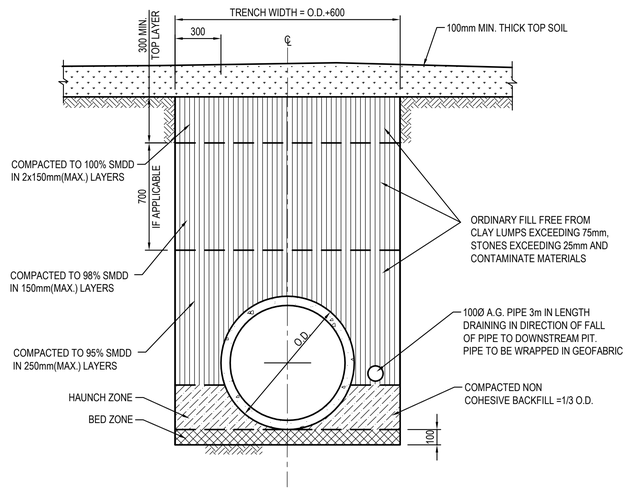

PIPE TRENCH INSTALLATION IN LANDSCAPE AREAS

(H1 & H2 SUPPORT)
SCALE 1:20

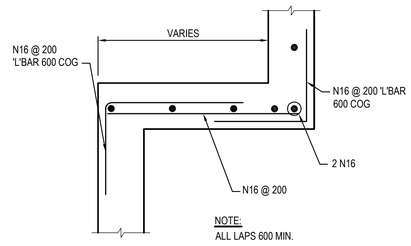

HAUNCH DETAIL -TYPICAL

N.T.S.

100 x 16 MOUNTING BAR WITH BRACKETS, SCREEN TO BE ATTACHED (GENERALLY ON A SLIDING MECHANISM) TO THE WALL, BUT SHOULD BE REMOVABLE (WITHOUT THE USE OF TOOLS) TO PERMIT CLEANSING AND EASY INSPECTION OF THE OUTLET CONTROL. ALL STEEL TO BE HOT DIPPED GALVANISED.

SCREEN TYPE WELDLOK A40/203 IS RECOMENDED FOR ORIFICES LARGER THAN 150mm AND SCREEN AREA 20 x THE ORIFICE AREA FOR THAT TYPE OF SCREEN - REFER UPRCT SECTION 4-13

MAXIMESH RH3030 IS RECOMMENDED FOR ORIFICES LESS THAN 150mm IN DIAMETER AND SCREEN AREA 50xTHE ORIFICE AREA REFER AUBURN COUNCIL AND UPPER PARRAMATTA RIVER CATCHMENT TRUST HANDBOOK.

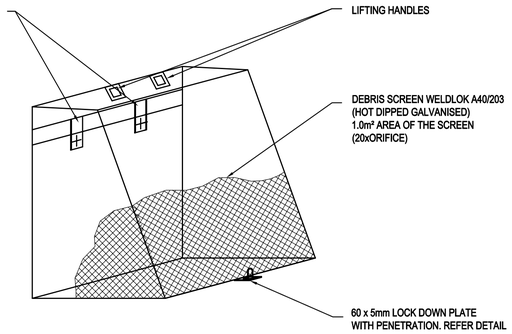

DEBRIS SCREEN DETAIL

NOT TO SCALE
ALL STEEL TO BE HOT DIPPED GALVANISED

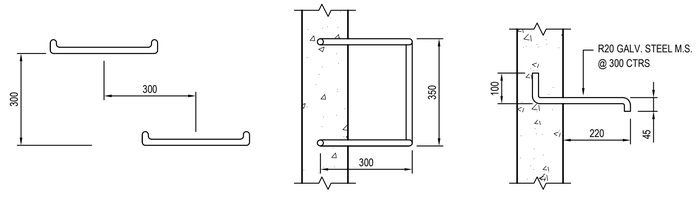

ELEVATION PLAN SECTION

TYPICAL STEP IRON DETAILS

N.T.S.

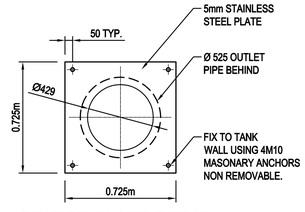

ORIFICE PLATE DETAIL

SCALE 1:20

0 400 800 1200 1600 2000mm
400 200
SCALE 1:20

FOR DA ONLY

REVISION	AMENDMENT	DRAWN	DESIGNED	DATE	REVISION	AMENDMENT	DRAWN	DESIGNED	DATE
01	ISSUED FOR DA ONLY	A.Levar	T.Dempsey	08/03/2011					

Client
GOLDEN THINKING

Architect
VT ARCHITECTS PTY LTD.

This drawing and design remains the property of Henry & Hymas and may not be copied in whole or in part without the prior written approval of Henry & Hymas.

Level 5,
79 Victoria Avenue
Chatswood NSW 2067

Telephone +61 2 9417 8400
Facsimile +61 2 9417 8337
Email email@hhconsult.com.au
Web www.henryandhymas.com.au

henry&hymas

Project
14, PARRAMATA ROAD, LIDCOMBE.
PROPOSED INDUSTRIAL DEVELOPMENT

Title
STORMWATER MISCELLANEOUS DETAILS & PIT LID SCHEDULE

Drawn	Designed	Date
A.Levar	T.Dempsey	MAR 2011
Checked	Approved	Scale
A.Francis	A.Francis	AS SHOWN @ A1

Drawing number: 11064_DA_C200
Revision: 01

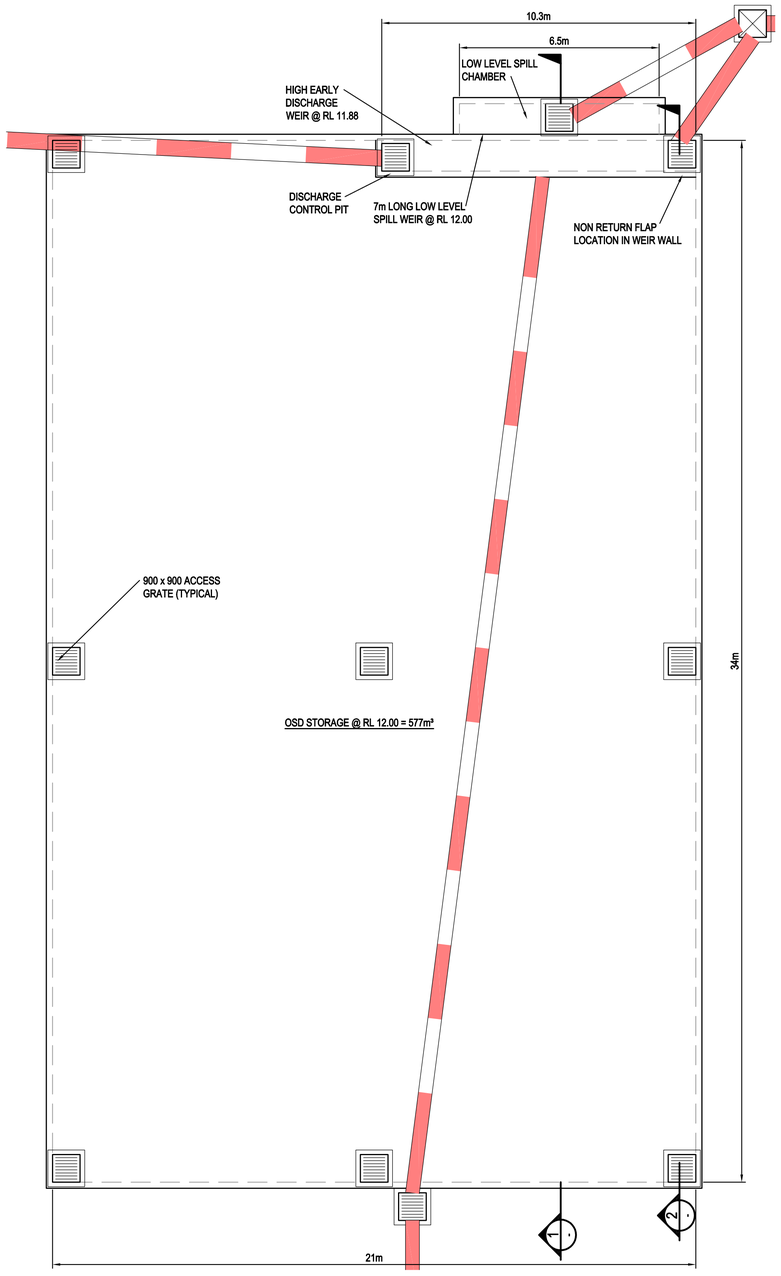

OSD TANK LAYOUT

SCALE 1:100

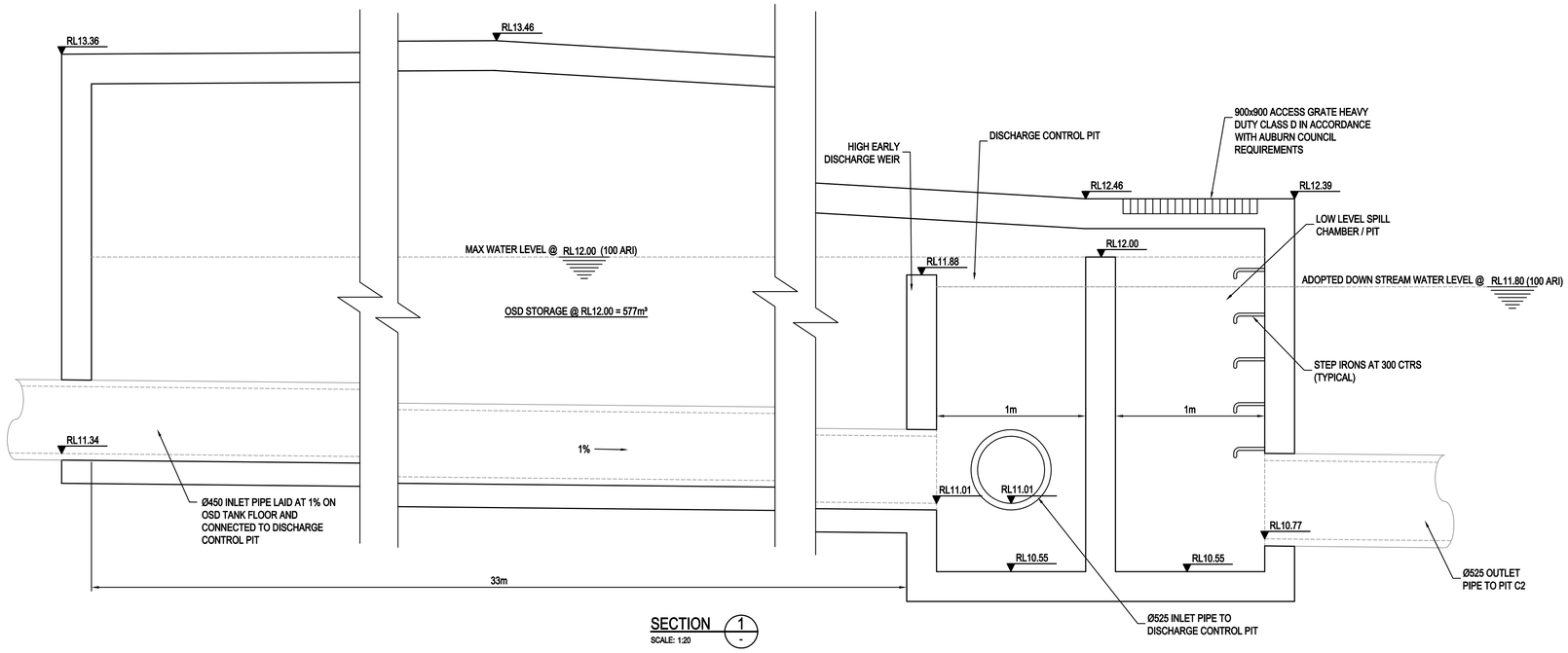

SECTION 1

SCALE: 1:20

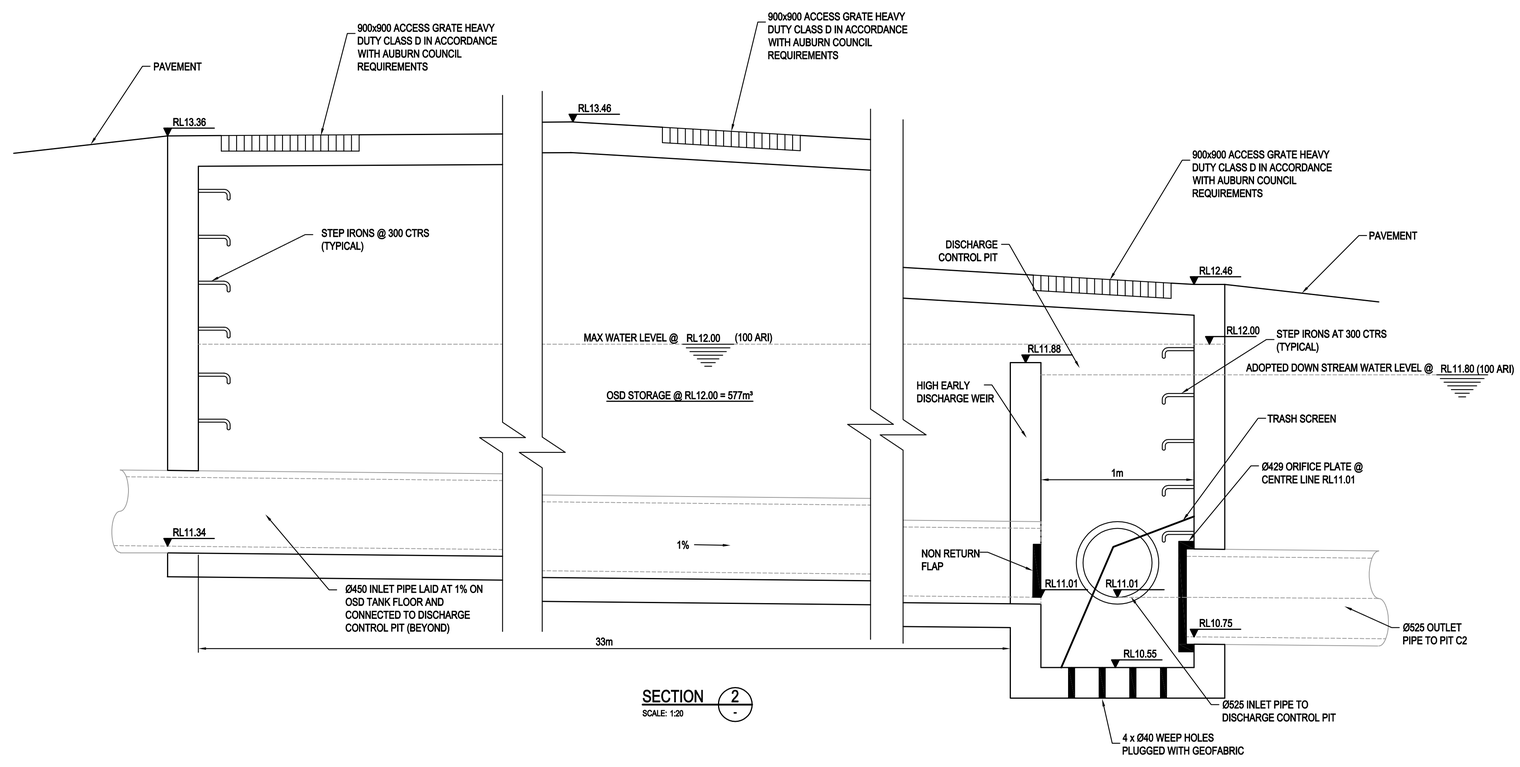

SECTION 2

SCALE: 1:20

0 400 800 1200 1600 2000mm
400 200
SCALE 1:20

0 2 4 6 8 10m
2 1
SCALE 1:100

FOR DA ONLY

REVISION	AMENDMENT	DRAWN	DESIGNED	DATE	REVISION	AMENDMENT	DRAWN	DESIGNED	DATE
01	ISSUED FOR DA ONLY	A.Levar	T.Dempsey	08/03/2011					

Client
GOLDEN THINKING

Architect
VT ARCHITECTS PTY LTD.

This drawing and design remains the property of Henry & Hymas and may not be copied in whole or in part without the prior written approval of Henry & Hymas.

Level 5,
79 Victoria Avenue
Chatswood NSW 2067

Telephone +61 2 9417 8400
Facsimile +61 2 9417 8337
Email email@hhconsult.com.au
Web www.henryandhymas.com.au

henry&hymas

Project
14, PARRAMATA ROAD, LIDCOMBE.
PROPOSED INDUSTRIAL DEVELOPMENT

Title
OSD TANK SECTIONS DETAILS

Drawn	Designed	Date
A.Levar	T.Dempsey	MAR 2011
Checked	**Approved**	**Scale**
A.Francis	A.Francis	AS SHOWN @ A1

Drawing number: 11064_DA_C201
Revision: 01

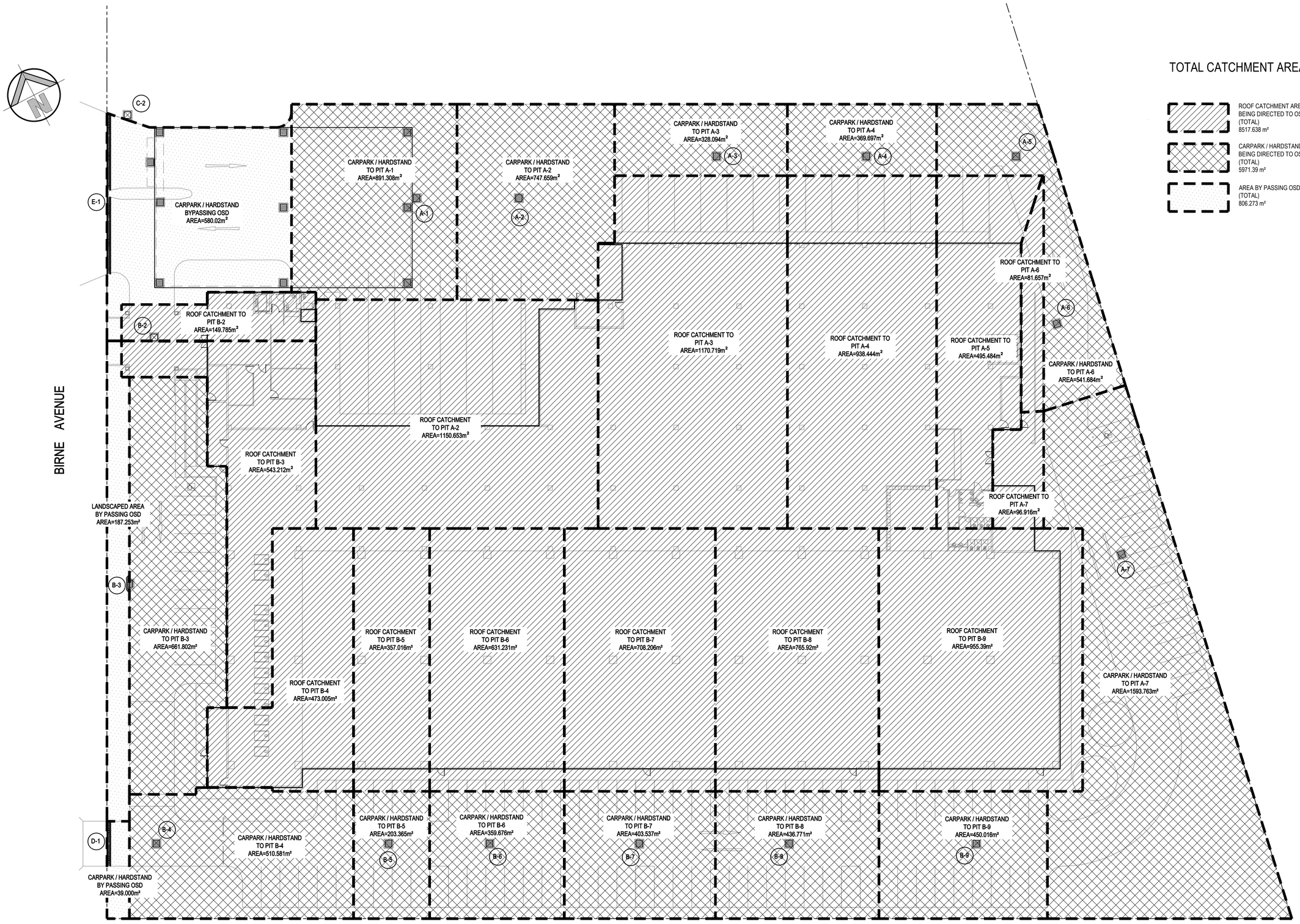

CATCHMENT PLAN

SCALE 1:250

0 5 10 15 20 25m

5 4 3 2 1

SCALE 1:250

FOR DA ONLY

REVISION	AMENDMENT	DRAWN	DESIGNED	DATE	REVISION	AMENDMENT	DRAWN	DESIGNED	DATE
01	ISSUED FOR DA ONLY	A.Levar	T.Dempsey	08/03/2011					

Client
GOLDEN THINKING

Architect
VT ARCHITECTS PTY LTD.

This drawing and design remains the property of Henry & Hymas and may not be copied in whole or in part without the prior written approval of Henry & Hymas.

Level 5,
79 Victoria Avenue
Chatswood NSW 2067

Telephone +61 2 9417 8400
Facsimile +61 2 9417 8337
Email email@hhconsult.com.au
Web www.henryandhymas.com.au

henry&hymas

Project
14, PARRAMATA ROAD, LIDCOMBE.
PROPOSED INDUSTRIAL DEVELOPMENT

Title
STORMWATER CATCHMENT PLAN

Drawn	Designed	Date
A.Levar	T.Dempsey	FEB 2011
Checked	Approved	Scale
A.Francis	A.Francis	1:250 @ A1

Drawing number: 11064_DA_C250

Revision: 01

dimer, AutoPDF